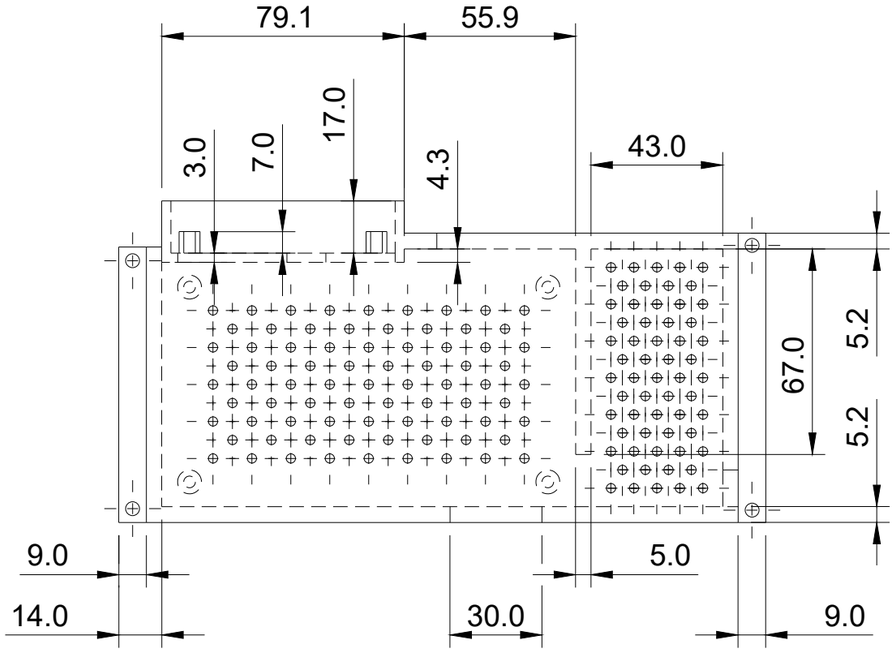

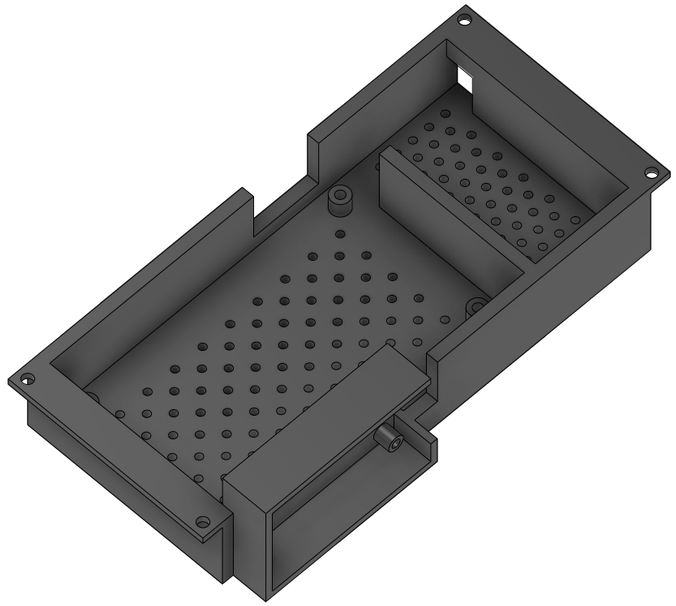

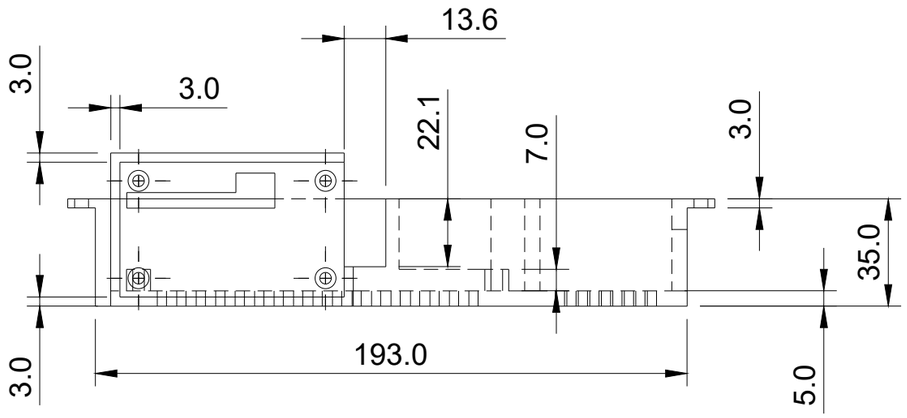

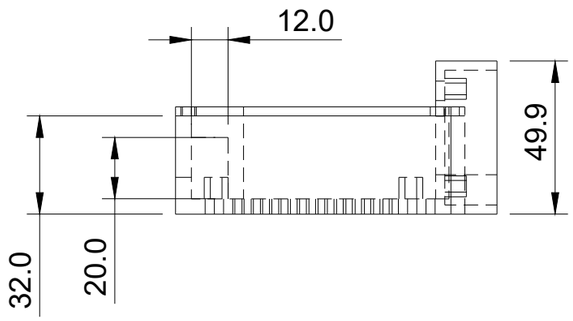

Dept.	Technical reference	Created by Ryan Miguel Gonzales 4/12/26	Approved by	
		Document type	Document status	
		Title PCB Case	DWG No.	
			Rev. / Date of issue	Sheet 1/3

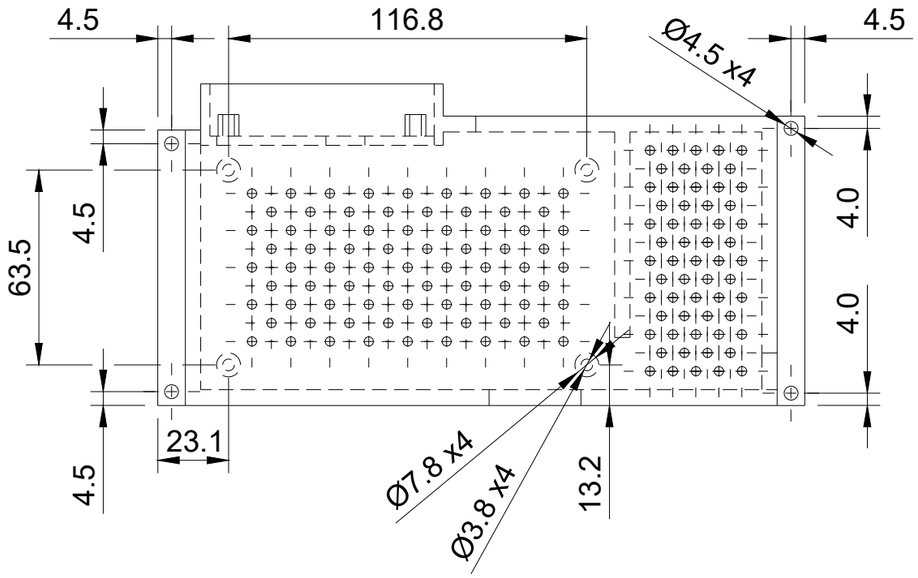

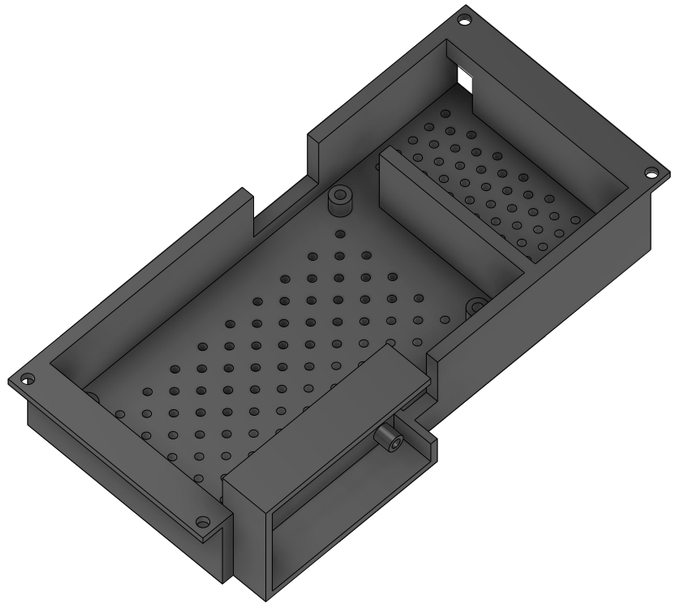

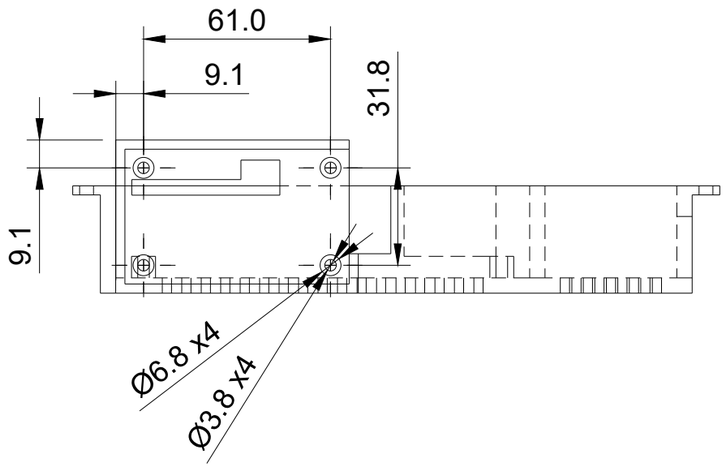

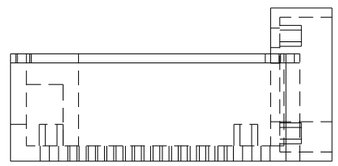

Dept.	Technical reference	Created by Ryan Miguel Gonzales 4/12/26	Approved by	
		Document type	Document status	
		Title PCB Case	DWG No.	
			Rev. / Date of issue	Sheet 2/3

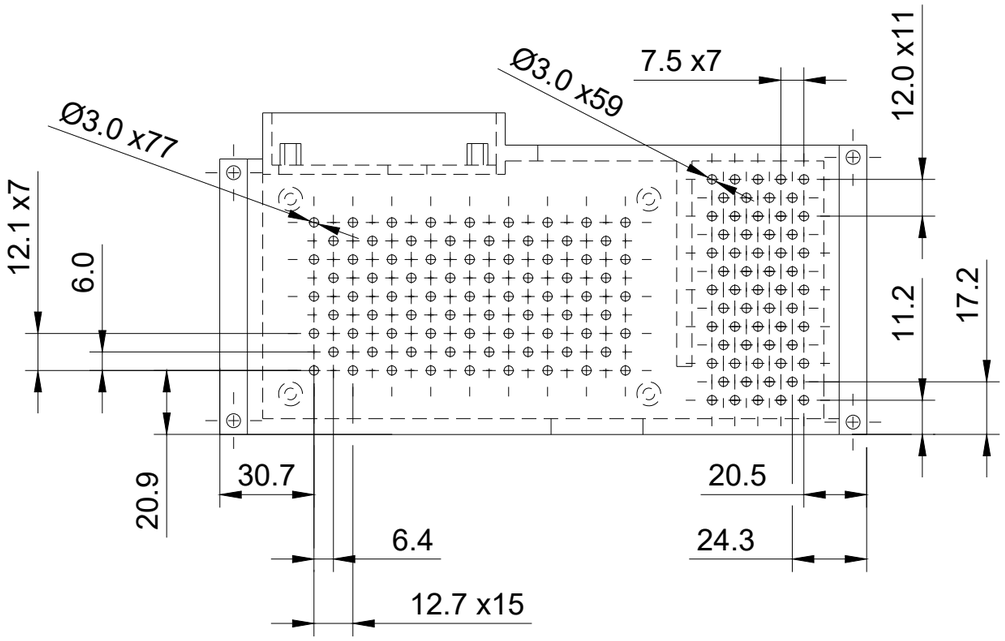

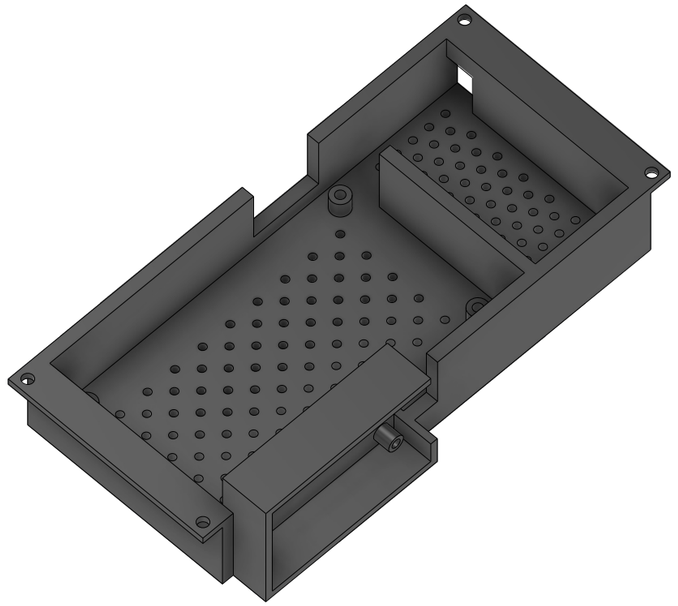

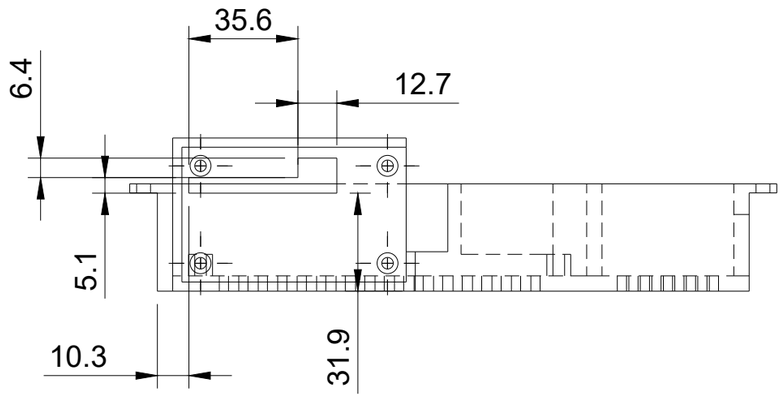

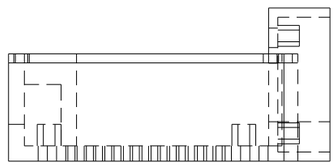

Dept.	Technical reference	Created by Ryan Miguel Gonzales 4/12/26	Approved by	
		Document type	Document status	
		Title PCB Case	DWG No.	
			Rev. / Date of issue	Sheet 3/3